OWNER'S MANUAL

930™ AND 935™ AUTOLOADING SHOTGUN

IMPORTANT "SAFETY WARNINGS" — NOTE THE SYMBOL ⚠

THESE SAFETY WARNINGS ARE FOR YOUR PROTECTION AS WELL AS THE SAFETY OF OTHERS.DISREGARDING INFORMATION IN THIS MANUAL MAY RESULT IN SERIOUS INJURY OR DEATH.

⚠ Be certain this owner's manual is available for reference and is kept with this firearm if transferred to another party. If the manual is lost or misplaced, contact Mossberg for a free replacement copy.

⚠ After performing any work on your firearm such as cleaning, adjustments, disassembly, or installation of any accessory, the firearm should be re-checked for proper functioning before firing live ammunition.

⚠ Firearms are complicated mechanisms. Any modification, alteration, or improper fitting of parts may result in a dangerous malfunction, damage to the firearm and injury to the shooter and others. The firearm's owner is responsible for the correct reassembly and functioning of the firearm after any disassembly or replacement of parts.

⚠ If you do not understand any of the material in this manual or have any questions, contact Mossberg or a qualified gunsmith.

⚠ Do not attempt to load or use any firearm until you have read and understood the information contained in its owner's manual. Before handling your firearm, you should learn how it operates and how to maintain it. This includes knowing its basic parts, how the manual safety and other safety features operate, how to safely open and close the action, and how to safely load and unload ammunition from the firearm. Improper use and handling is dangerous and could cause serious injury or death to you or those around you. All users of the firearm must become thoroughly familiar with the instructions in this manual.

O.F. MOSSBERG & SONS, INC.
P.O. BOX 497 • 7 GRASSO AVENUE, NORTH HAVEN, CT 06473
PHONE (203) 230-5300 FAX (203) 230-5420
www.mossberg.com

Safety and safe firearms handling is everyone's responsibility.

As the owner of a firearm, you must undertake the full-time responsibility of safe firearms handling for your own safety and the safety of those around you:

- Keep all firearms and ammunition out of the reach of children.
- Store your firearms and ammunition separately.
- Never store a loaded firearm.
- Never leave a loaded firearm unattended.
- Never transport a loaded firearm in a vehicle.
- Unload your firearm when you have stopped shooting and when you have to climb a tree, fence, cross a slippery surface or have to transport it in a vehicle.
- Do not load your firearm before you are in a place where it is safe to shoot, and keep your finger off the trigger until you are on target and have decided to fire.
- Never shoot at water, rocks or any hard surfaces. Shots may glance off such surfaces and cause injuries.
- Do not use alcohol or drugs before or while handling firearms.
- Do not touch the trigger while the safety button is being engaged or disengaged.

Always point the muzzle of your firearm in a safe direction, regardless of whether the firearm is loaded or unloaded.

Always treat every firearm as if it were loaded. Give your firearm to someone with the action open (bolt fully rearward) and safety in the "ON" (SAFE) position, after you verify the firearm is unloaded. Insist on the same procedure when receiving a firearm from someone else. Learn the location of all the safety features of your firearm and how they operate.

Wear eye and ear protection when shooting. Shooting without proper ear protection can cause hearing damage. The use of eye protection during any type of shooting is important to protect your eyesight.

Due to the heavy recoil of a shotgun, maintain an adequate distance between the rear of the scope (if equipped) and your face at all times. Be certain the scope installation does not interfere with access to, or the proper functioning of the safety button.

WE SPECIFICALLY DISCLAIM ANY RESPONSIBILITY FOR DAMAGE OR INJURY WHATSOEVER OCCURRING IN CONNECTION WITH, OR AS A RESULT OF, THE USE OF FAULTY, OR NON-SAAMI STANDARD OR "REMANUFACTURED," OR HAND-LOADED (RELOADED) AMMUNITION. ADDITIONALLY, WE DISCLAIM ANY RESPONSIBILITY FOR DAMAGE OR INJURY WHICH RESULTS FROM ANY MODIFICATIONS OR CHANGES THAT ARE NOT A PART OF THE FIREARM AS DELIVERED FROM THE FACTORY.

Learn to clean your firearm thoroughly and make certain no oil, grease, or other materials are blocking the barrel. Obstructions of any kind can cause damage to the firearm, and may result in serious personal injury to you or those around you.

Practice proper firearm maintenance and safety. Make sure all exposed metal surfaces are coated with a thin film of oil, especially after exposure to damp weather. (See proper section of this manual for cleaning instructions). Do not plug barrel or store in a fabric-lined case which will absorb lubricants from the firearm. Before using after storage, follow complete instructions stated in this manual for refamiliarization with the firearm. A thorough inspection should be performed before going into the field. Have your firearm periodically checked by a qualified gunsmith.

TABLE OF CONTENTS

	Page
The Mechanical Safety	2
The Cocking Indicator	3
Unpacking Your Shotgun	4
To Lock Action Open and Remove Chamber Plug	4
Closing the Action	5
Magazine Plug	6
Loading the Shotgun	6,7
Loading the Magazine	8
Firing the Shotgun	9
Unloading the Shotgun	10
Disassembly	11-13
Cleaning and Lubrication	14,15
Action Re-Assembly	15-17
Function Testing	18
Sight Adjustments	19
Stock Spacer System	20
Choke Tubes	21,22
Service Instructions	23
Warranty Information	24
Notes	25-27
Parts List	28
Exploded View	29
The Basic Rules of Safe Firearms Handling	Back Cover

Read and understand this entire manual and its safety warnings before handling this firearm.

MECHANICAL SAFETY

The safety button is located on the top rear portion of the receiver (Figure 1) and must be manually moved to the desired position by the shooter.

To put the safety in the "ON" (SAFE) position, the safety button must be moved fully rearward into the safety detent. The button will now cover the red dot. The red dot is a training aid used only to show the direction of the "ON" (SAFE) position and should not be used as an indicator that the safety is "ON" or "OFF." Moving the safety button forward toward the muzzle of the shotgun will put the safety in the "OFF" (FIRE) position.

Remember, a firearm's manual safety is a mechanical device which can never replace safe firearm handling practices.

Never rely on any mechanical mechanism or safety device to prevent the dangers of careless handling or pointing a firearm in an unsafe direction.

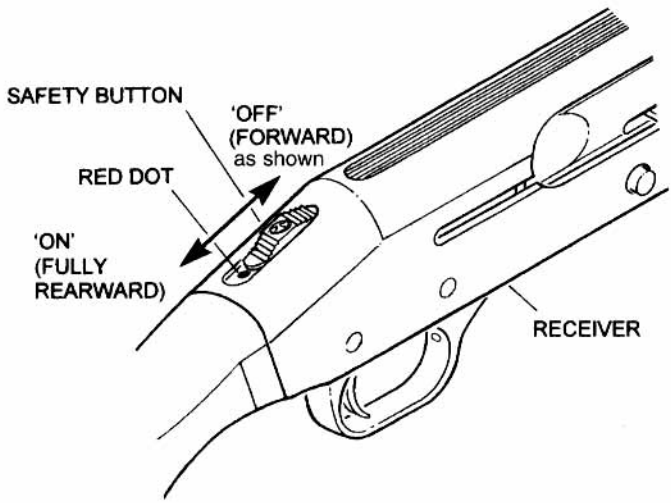

Figure 1

COCKING INDICATOR

Your shotgun is equipped with a cocking indicator located in the forward section of the trigger guard (Figure 2). The cocking indicator allows the shooter to know whether or not the shotgun is cocked. When the shotgun is cocked (ready to fire), the indicator will protrude into the trigger guard. The cocking indicator is an automatic device; it cannot be manually activated or deactivated.

The cocking indicator is not a safety and does not indicate whether or not a shotshell is in the chamber. You must visually and physically inspect the chamber to determine if the shotgun is loaded.

Remember, the firearm's cocking indicator is a mechanical device which can never replace safe firearm handling practices.

Never rely on any mechanical mechanism or safety device to prevent the dangers of careless handling or pointing a firearm in an unsafe direction.

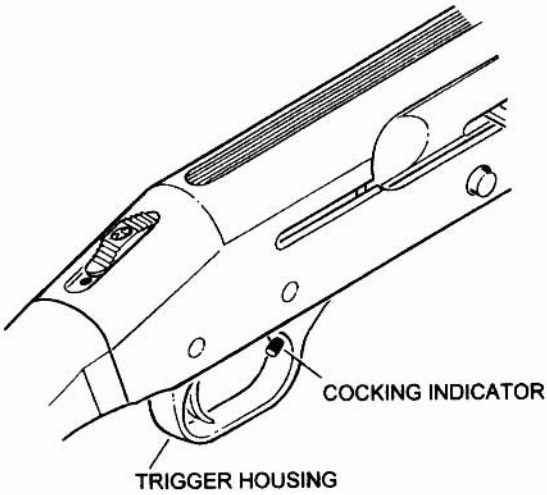

Figure 2

UNPACKING YOUR SHOTGUN

Your shotgun is shipped from the factory fully assembled. Before using this shotgun, gently tug outward on the operating handle to ensure it is securely engaged in the bolt. If the operating handle should come out of the bolt, please refer to the **Action Reassembly** instructions. The operating handle must be properly installed prior to use. A bright orange chamber plug has been inserted in the chamber (Figure 3) as an aide to ensure that the chamber is unloaded. You must remove this plug prior to use.

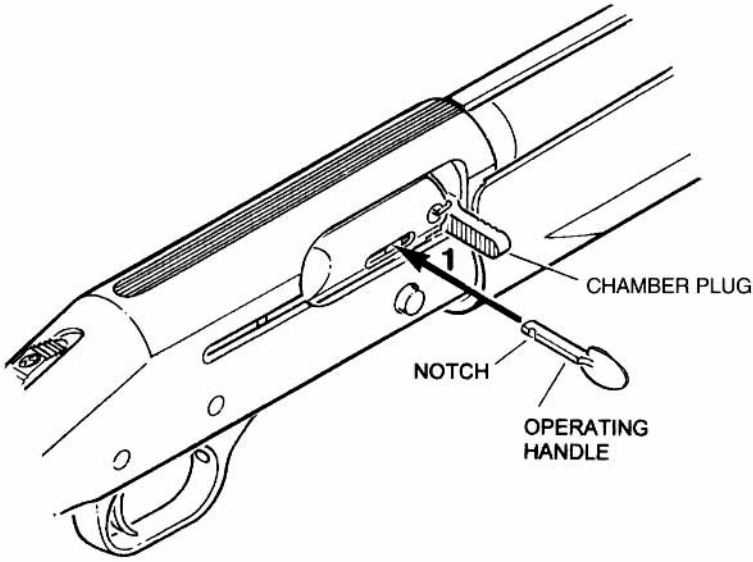

Figure 3

TO LOCK ACTION OPEN AND REMOVE CHAMBER PLUG

1. With the safety button fully rearward in the "ON" position and the shotgun pointed in a safe direction, hold the shotgun in your left hand by the forearm, and grasp the operating handle with your right hand (Figure 4).

2. Pull the operating handle fully rearward in one quick motion. When released, the action will move slightly forward (towards the muzzle) and lock in the open position.

3. Remove chamber plug from the chamber. It is recommended that the chamber plug be reinstalled when the firearm is not in use as an added measure of safety to indicate the chamber is unloaded.

⚠ Visually and physically check to be sure the firearm is unloaded and the safety button is fully rearward in the "ON" (SAFE) position (Figure 1).

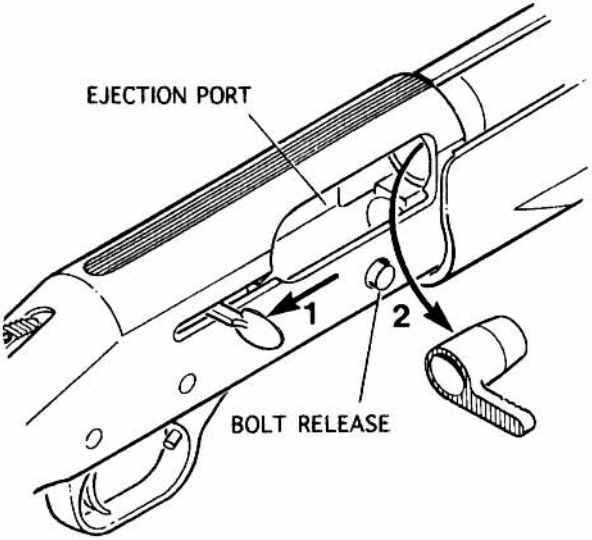

Figure 4

The bolt is always under spring pressure. When the bolt release is pushed with the bolt locked rearward, the bolt is driven forward toward the muzzle with considerable force. Do not have fingers or other objects in the ejection port or near the operating handle.

Visually and physically inspect the chamber and bore of the barrel to make certain it is free of any obstructions, excessive oil or grease. If you are unable to remove any obstruction, bring the firearm to a qualified gunsmith or send it to a factory authorized Product Service Center. Obstructions of any kind can result in damage to the firearm and/or serious personal injury to you or those around you when the firearm is fired.

TO CLOSE ACTION

Keep fingers clear of operating handle and ejection port when closing action. (Figure 4)

With safety button fully rearward in the "ON" (SAFE) position, and the shotgun pointed in a safe direction, press bolt release until action releases (Figure 4).

TO REMOVE MAGAZINE PLUG

Be sure the shotgun is unloaded by visually and physically checking the chamber, elevator, and magazine tube, and the safety button is fully rearward in the "ON" (SAFE) position before performing any assembly or disassembly procedure.

Unscrew and remove the magazine cap (Figure 9). Grasp the barrel and forearm to prevent them from sliding forward. Do not place your hand over the muzzle at any time. Point the muzzle downward and shake the shotgun in an up and down motion until the wooden dowel falls through the opening at the end of the magazine tube.

TO INSTALL MAGAZINE PLUG

Be sure the shotgun is unloaded by visually and physically checking the chamber, elevator, and magazine tube, and the safety button is fully rearward in the "ON" (SAFE) position before performing any assembly or disassembly procedure.

Unscrew and remove the magazine cap (Figure 9), insert either end of the wooden dowel at the end of the magazine tube, inside the coils of the magazine spring. Replace magazine cap finger tight only. Do not use pliers or a wrench to tighten the magazine cap.

MAGAZINE CAPACITY

MOSSBERG® 935™ MODELS ARE DESIGNED TO FIRE 3" AND 3 1/2" 12 GAUGE SHOTSHELLS ONLY!

930™ Models: Five (5) 2 3/4" or 3"shotshells (4 in the magazine tube, plus one in chamber)

935™ Models: Five (5) 3" shotshells (4 in the magazine tube, plus one in chamber), or Four (4) 3 1/2" shotshells (3 in the magazine tube, plus one in chamber).

MAGAZINE PLUG – You are responsible for complying with all laws regarding magazine capacity. To comply with U.S. migratory bird laws, your shotgun was shipped with a wooden dowel inserted into the magazine tube which limits magazine capacity to two (2) shells.

TO LOAD SHOTGUN

930™ Models are designed for 2-3/4" factory loaded shells and 3" factory loaded magnum shells.

935™ Models are designed to fire 12 gauge 3" or 3-1/2" factory loaded ammunition only. Do not fire slugs of any type (single projectile ammunition) through the overbored **935™** Accu-Mag barrel. This barrel is designed to shoot lead or steel pellet shot loads only. Use only **935™** barrels designated specifically for slug shooting.

Fully rifled barrels deliver best accuracy with sabot style slugs. "Rifled" slugs and shotshells are not recommended for use in rifled barrels.

Before loading, move the safety button fully rearward to the "ON" (SAFE) position (Figure 1).

During loading, never allow fingers or any other objects to contact the trigger. Keep the muzzle pointed in a safe direction at all times.

Open the action by pulling the operating handle completely rearward until it locks in the open position. (See "**TO LOCK ACTION OPEN**", Figure 4)

Do not load shotgun until ready for use! Unload shotgun when shooting has been completed! The safety button should always be fully rearward in the "ON" (SAFE) position whether or not the firearm is loaded.

Inspect the chamber and bore of the barrel for any obstruction, excessive oil or grease. (The chamber is the rear portion of the barrel where the cartridge will be inserted.) Obstructions of any kind can result in damage to the firearm and/or serious personal injury to you or those around you when the firearm is fired.

Check to be certain that the ammunition selected is the same type of cartridge as designated on the barrel of the shotgun.

To load the firearm with the maximum number of shells, or fire single shots:

1. Lock action open by pulling operating handle rearward (Figure 5).
2. Load the first shell through the ejection port located on the right side of the receiver. The shell can be inserted directly into the chamber or placed on top of the elevator (Figure 5).

Keep fingers clear of operating handle and ejection port when closing action (Figure 4).

3. With safety button fully rearward in the "ON" (SAFE) position, and the muzzle pointed in a safe direction, press bolt release until action releases (Figure 4).
4. The action will close under spring force, chambering a live shell. **Be sure to keep fingers and other objects out of the ejection port!**

The shotgun in now loaded! The safety button (Figure 1) should be kept fully rearward in the "ON" (SAFE) position until you are on target and have actually decided to fire. Keep the muzzle pointed in a safe direction at all times, and your fingers and any other objects away from the trigger area.

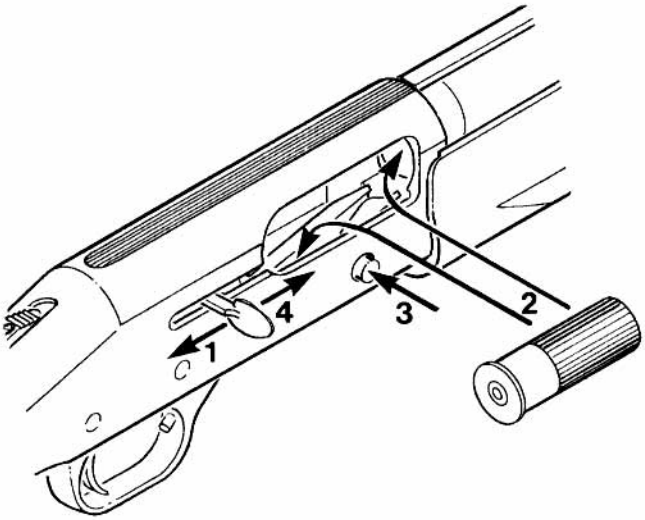

Figure 5

TO LOAD MAGAZINE

With the safety button fully rearward in the "ON" (SAFE) position, and the bolt in the forward (closed) position, hold the shotgun with the bottom of the receiver facing upward. **Keep the muzzle pointed in a safe direction at all times.**

1. Carefully push the shotshell into the loading port, depressing the elevator (Figure 6). This will expose the magazine tube opening within the receiver.

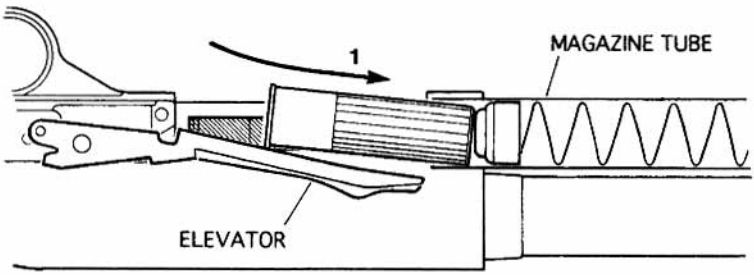

Figure 6

2. Continue carefully pushing the shotshell into the magazine tube until the rim of the shell is past the shell stop (Figure 7). The shell stop will "snap" over the rim of the shell. Repeat this sequence to load each additional shell.

If the shell is not pushed all the way into the magazine tube, it will pop back out on the opposite side of the elevator. If this should occur, keeping the muzzle in a safe direction, simply open the action by pulling the operating handle rearward, ejecting the shell in the chamber. Releasing the operating handle will allow the action to close, automatically feeding the "misloaded" cartridge into the chamber.

The shotgun is now <u>loaded</u> and will fire if the safety is moved to the "OFF" (FIRE) position and the trigger is pulled.

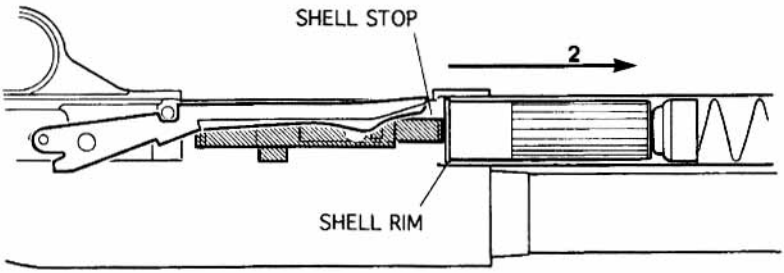

Figure 7

FIRING

Discharging firearms in poorly ventilated areas, cleaning firearms, and/or handling ammunition may result in exposure to lead and/or other substances known to cause birth defects, reproductive harm, and/or other serious physical injury. Have adequate ventilation at all times. Wash hands thoroughly after exposure.

During firing, the operating handle travels rearward with considerable force and speed. Do not place hands or other objects in its path.

TO FIRE

With the shotgun pointed in a safe direction and held in the proper firing position, move the safety button fully forward to the "OFF" (FIRE) position. Pulling the trigger through its full travel to the rear will fire the shotgun. Ensure muzzle is pointed in a safe direction before placing finger on trigger.

After firing, the empty cartridge will be automatically ejected through the ejection port. Be sure all observers are clear of the path of ejection, as the empty cartridges are thrown out with considerable force and could cause injury.

This shotgun automatically feeds the next live round from the magazine tube into the chamber each time the shotgun is fired, until all rounds in the magazine tube are fired. You should be aware that no mechanical force on the part of the user is needed in this process and you should be alert to the fact that the chamber is loaded for you and the shotgun is capable of firing again if the trigger is pulled.

This shotgun is designed so that when all shells have been fired, the bolt will automatically lock rearward in the open position. You should never use this feature as a guide for determining if the shotgun is empty! Always visually and physically inspect the chamber, elevator, and magazine tube for the presence of ammunition.

Should any shell fail to fire, keep the shotgun pointed in a safe direction and move the safety fully rearward to the "ON" (SAFE) position. Wait a few moments and then remove the misfired shell and keep separate from other ammunition. Do not attempt to refire a misfired shell.

If at any time during firing, the sound of any shell is noticeably louder or softer than the previous shells fired, **STOP!** Do not load or fire additional shells until you have put the safety in the "ON" (SAFE) position and safely unloaded your shotgun. Inspect the shotgun for possible damage or obstructions in the chamber or bore. (The bore is the inside surface of the barrel.) Firing the shotgun with a bore obstruction can cause damage to the firearm and could result in serious personal injury to you or those around you.

TO UNLOAD

Move the safety button fully rearward to the "ON" (SAFE) position and keep the muzzle pointed in a safe direction at all times. At no time during unloading should you allow your fingers or any other object to touch the trigger.

1. First, remove the shells from the magazine tube. With the safety button fully rearward in the "ON" (SAFE) position, turn the shotgun so that the trigger guard is facing upward (Figure 8).

2. Depress the elevator.

3. While holding the elevator down with your thumb, press the bolt release (Figure 4). This will release one shell from the magazine tube under spring pressure.

4. Repeat this procedure until the magazine tube is empty.

5. With the magazine tube empty, pull the operating handle fully rearward. This will eject the shell in the chamber of the shotgun and lock the action in the "OPEN" position.

Visually and physically inspect the chamber, elevator, and magazine tube to be certain the shotgun is completely unloaded.

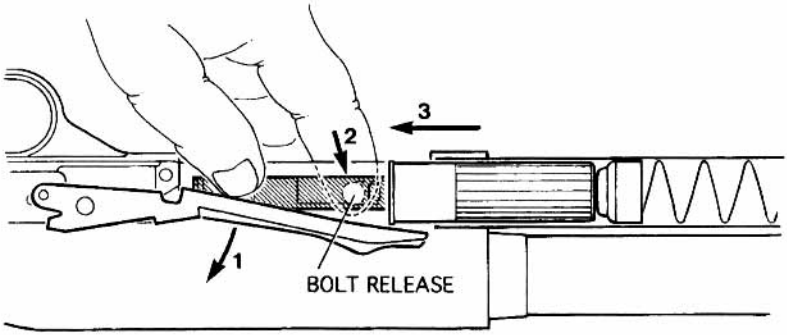

Figure 8

Move the safety button fully rearward to the "ON" (SAFE) position and visually and physically check the chamber, elevator, and magazine tube to be certain the shotgun is unloaded before disassembling the firearm. Wear eye protection during disassembly and cleaning.

BARREL REMOVAL

The action must be in the closed position (bolt fully forward). (See "To Close Action" section.)

1. Unscrew the magazine cap (Figure 9).
2. Slide forearm forward.
3. Slightly pull back operating handle and pull barrel forward, free of the receiver and magazine tube.

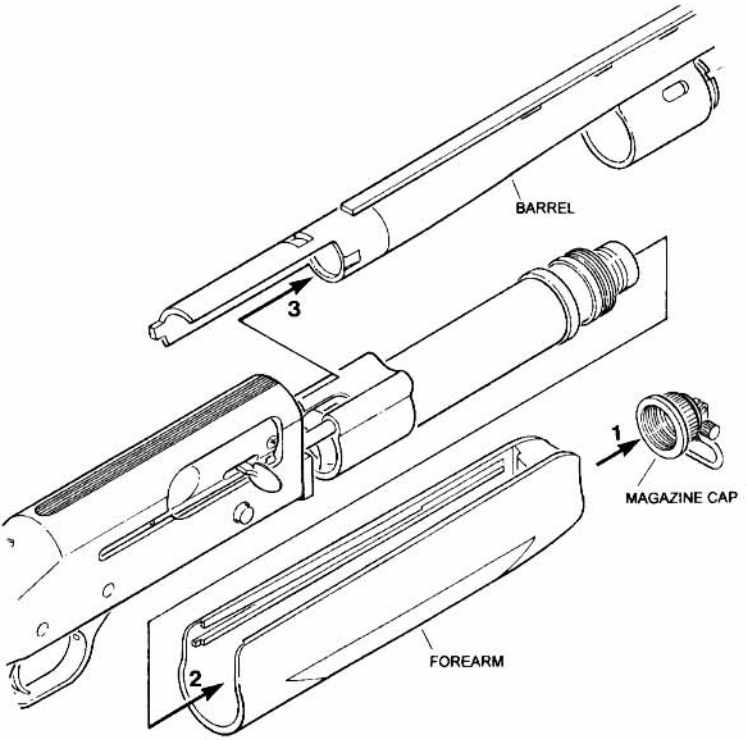

Figure 9

GAS SYSTEM REMOVAL

Remove the seal ring, gas piston, spacer tube, pusher assembly, gas system return spring, and forearm retainer from the magazine tube (Figure 10). Note orientation of seal ring for reassembly. Angled surface of seal ring must face outward.

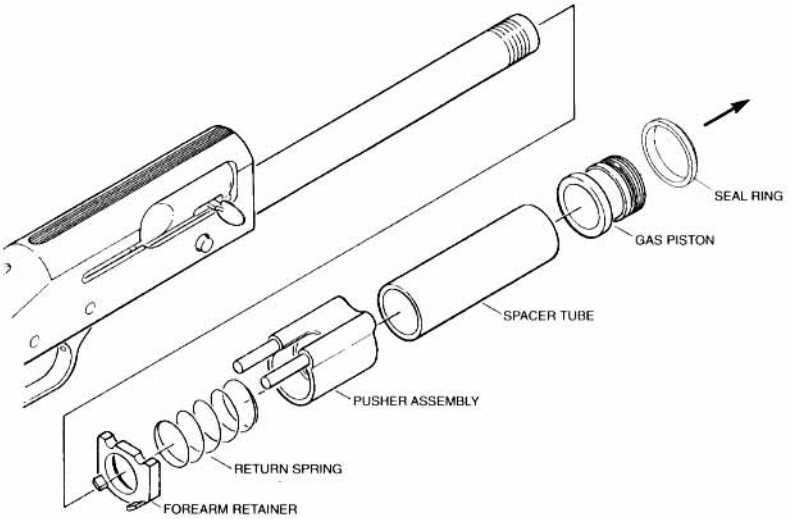

Figure 10

ACTION REMOVAL/DISASSEMBLY

1. Pull the operating handle straight out of the bolt (Figure 11).
2. Remove bolt and slide assemblies from the receiver through the barrel hole.
3. Remove bolt from slide.
4. Push link pin out with blunt object no larger than 1/8" diameter.
5. Remove link.

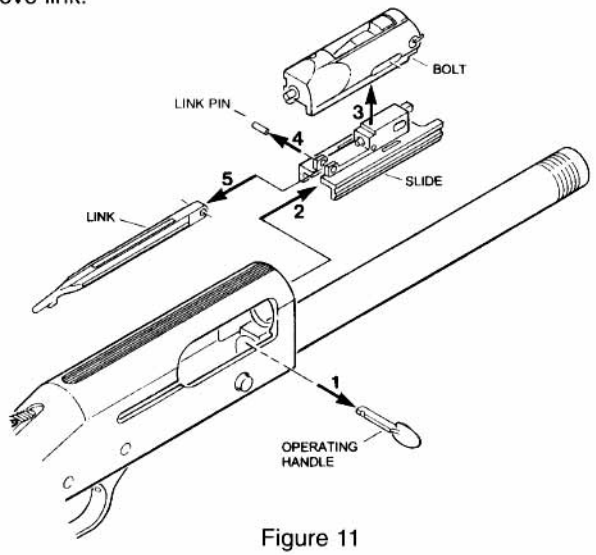

Figure 11

TRIGGER HOUSING ASSEMBLY REMOVAL

1. Push out the two trigger housing retaining pins using a blunt object no larger than 1/8" diameter (Figure 12). (The pins can be pushed out from either direction).

2. Remove the trigger housing assembly by pulling it straight out of the receiver.

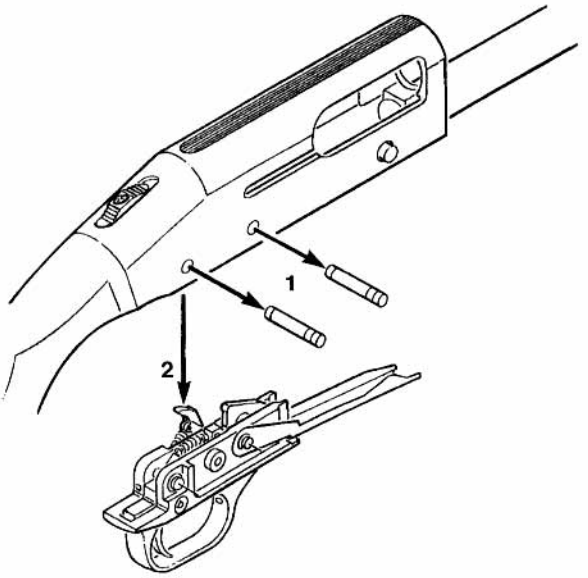

Figure 12

The trigger housing assembly is a complex assembly and must not be disassembled. Disassembly should only be performed at an authorized Product Service Center or by a qualified gunsmith.

Do not pull the trigger and allow the hammer to fall when the trigger housing assembly is removed from the receiver. To do so may result in personal injury or damage to the assembly.

Field disassembly is now complete. The shotgun should not be disassembled any further for routine cleaning or maintenance. Further disassembly should only be performed at an authorized Product Service Center or by a qualified gunsmith.

CLEANING AND LUBRICATION

With proper maintenance and care, your Mossberg® shotgun will provide you with years of dependable service. Your firearm should be inspected and cleaned periodically to ensure that it remains in good condition. Clean your firearm as soon as possible after use. This is especially important if your firearm has been exposed to moisture. For maximum performance and continued satisfaction with your shotgun, periodic cleaning and lubrication are essential.

Follow the instructions and equipment provided with a quality gun cleaning kit.

Always be sure that the safety button is fully rearward in the "ON" (SAFE) position (Figure 1) and that the shotgun is unloaded by visually and physically checking the chamber, elevator, and magazine tube before cleaning your shotgun. Wear eye protection during cleaning.

Normal use requires only that the mechanisms be free of excessive shooting residue. Very little lubrication other than a light oiling of internal and external surfaces to prevent rust is needed.

To ensure optimum performance, Mossberg recommends thorough cleaning of your firearm after every 200 rounds. However, unusually dusty, dirty, or harsh weather conditions, or use of ammunition which leaves significant powder residue may require more frequent cleaning.

If the firearm is to be stored for a long period of time, it should be thoroughly cleaned and oiled. Do not plug the barrel or store in a fabric-lined case that will absorb lubricant from the firearm, as this may result in corrosion to the unprotected metal surfaces.

Over-lubrication should be avoided during below freezing conditions. Many lubricants thicken in low temperatures which could affect the operation of the firearm. Exposure to unfavorable weather or moisture from condensation requires additional care to prevent corrosion to the firearm.

BARREL CLEANING

Scrub bore and chamber with solvent and follow with cleaning patches until barrel is clean. A final pass with a lightly oiled patch will provide a protective coating. A stiff brass bristle brush is useful for removing stubborn deposits.

Be sure not to leave cleaning patches or excessive oil or grease in the bore as they can create dangerous obstructions, resulting in damage to the firearm and/or serious personal injury to you or those around you.

ACTION CLEANING

Clean all components of the action including the bolt, slide, and link (Figure 11) to remove accumulated residue. An evaporating solvent should be used. Action parts will remain cleaner longer if lubrication is used sparingly.

RECEIVER CLEANING

Clean the inside of receiver with a rag or soft brush, giving special attention to the tracks which guide the bolt and slide. Place a few drops of light oil in these tracks when clean. Care should be taken when cleaning the exterior surfaces of the receiver to prevent cosmetic damage. Never use a brush with metal bristles, as this could remove the protective coating on the receiver.

TRIGGER HOUSING CLEANING

Brush loose residue from trigger housing with a soft bristle brush. Never use a brush with metal bristles, as this could remove the protective coating on the trigger housing.

Never pull the trigger while the trigger housing is removed from the receiver, as damage to the trigger housing or personal injury may result.

GAS SYSTEM CLEANING

The gas system includes the magazine tube, seal ring, gas piston, spacer tube, gas system return spring, and gas cylinder portion of the barrel (Figure 15). These parts should be thoroughly cleaned using solvent. A stiff brass bristle brush is useful for removing stubborn deposits.

Apply a light coat of gun oil to all metal parts and then wipe thoroughly with a dry cloth. Excess oil will accelerate the build up of carbon residue in the gas system and may have a negative effect on the shotgun's performance.

Camouflage guns: Caution should be exercised to avoid exposure of camouflage patterns to strong solvents or insect repellants.

ACTION RE-ASSEMBLY

1. Position link in slot in rear of slide (Figure 13).

2. Attach link to slide with link pin. Link must be installed with tab side facing down.

3. Place bolt on top of slide, making sure it sits flat.

4. Install bolt and slide assembly into front of receiver, link first. The slide may need to be "wiggled" side to side in order to engage the tracks in the receiver. The bolt will stop when it is nearly flush with the front of the receiver. While aligning the end of the link with the return spring plunger, press the bolt release. This will allow the action to seat in the receiver. The end of the link must be in the return spring plunger! Push bolt rearward into receiver just far enough for operating handle slot to become fully visible.

5. To install the operating handle, first ensure the safety button is in the "ON" (SAFE) position. Next hold the operating handle with the notch facing rearward and push the handle through the bolt into the slide assembly. Push operating handle inward until plunger engages with notch in operating handle. Gently tug outward on the operating handle to ensure it is securely engaged in the bolt. The operating handle will now prevent the action from coming out of the receiver.

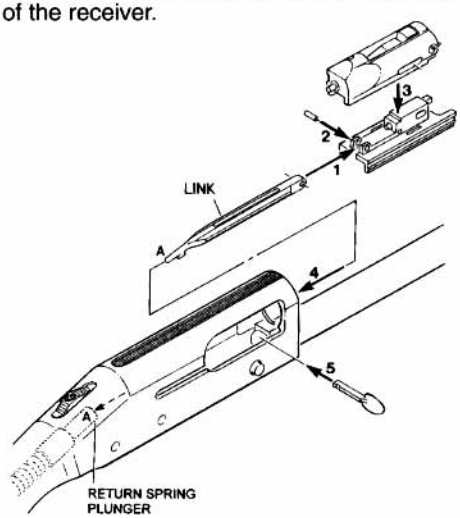

Figure 13

TRIGGER HOUSING ASSEMBLY RE-ASSEMBLY

1. Insert the trigger housing assembly into the receiver and align the two trigger housing retaining pin holes (Figure 14).
2. Push in the trigger housing pins until they are flush with the sides of the receiver.

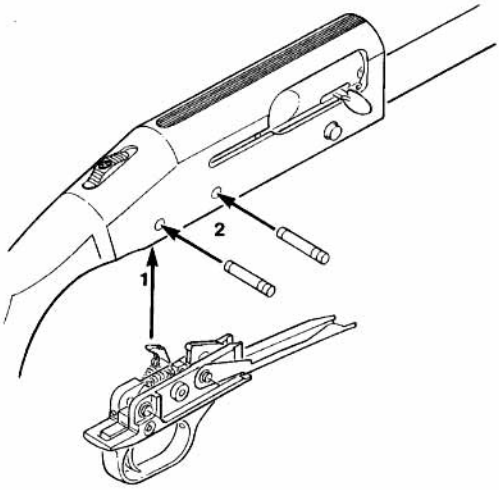

Figure 14

BARREL AND GAS SYSTEM RE-ASSEMBLY

Barrels are not interchangeable between model numbers, gauge or capacity. **930**™ and **935**™ model barrels are interchangeable only with barrels of the same model, gauge and capacity.

1. Grasp the operating handle and lock the action in the "OPEN" position (Figure 15).

2. Install forearm retainer, gas system return spring, pusher assembly, spacer tube, gas piston, and seal ring onto magazine tube. Note orientation of seal ring. Angled surface of seal ring must face out.

3. Install barrel into receiver and over magazine tube. Continue to push barrel into receiver until fully seated. If barrel binds during assembly, slide gas piston forward, towards the gas cylinder, this should allow the barrel to seat.

4. Install forearm.

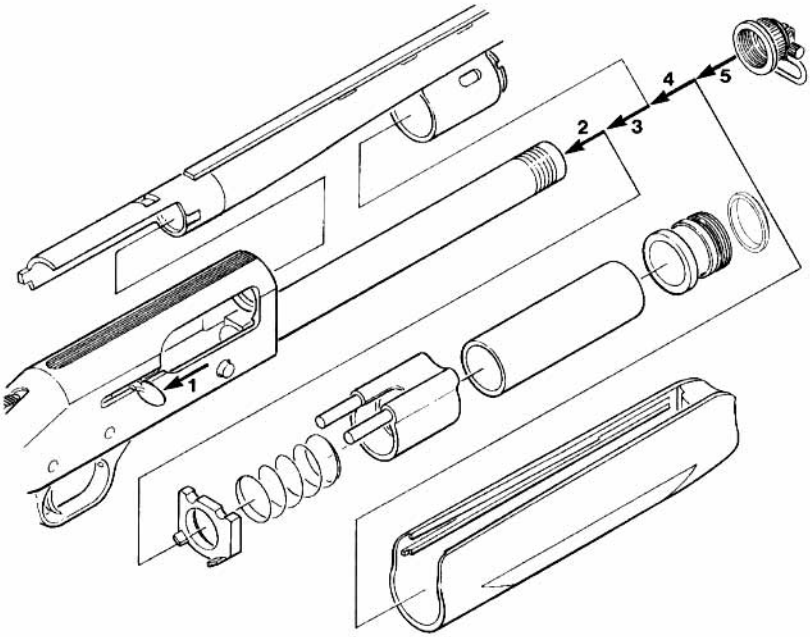

5. Install magazine cap. Tighten cap hand-tight only.

Figure 15

FUNCTION TESTING

After performing any work on your firearm such as cleaning, disassembly, or installation of any accessory, check your firearm for proper functioning before firing any live ammunition.

Be sure the firearm is completely unloaded by visually and physically checking the chamber, elevator, and magazine tube. Also make certain the firearm is pointed in a safe direction at all times.

1. Move the safety button fully rearward to the "ON" (SAFE) position.

2. Grasp the operating handle and pull the bolt fully rearward. It should lock in the open position.

3. With fingers and other objects clear of the ejection port, press the bolt release and allow the bolt to move forward under spring pressure. It should lock in the fully closed position. Repeat this procedure several times to check for free movement of the action assemblies.

4. With the action closed and the safety button fully rearward in the "ON" (SAFE) position, pull the trigger fully rearward. The hammer should not fall (NO FIRE).

5. Remove your finger from the trigger. Move the safety button forward to the "OFF" (FIRE) position. The hammer should not fall (NO FIRE).

6. Leave the safety button forward in the "OFF" (FIRE) position.

7. Pull the trigger rearward. The hammer should fall (FIRE).

8. Open the action. Move the safety button rearward to the "ON" (SAFE) position.

IF YOUR FIREARM DOES NOT PERFORM AS DESCRIBED IN ANY OF THE ABOVE STEPS, CONTACT THE FACTORY AUTHORIZED PRODUCT SERVICE CENTER IMMEDIATELY. DO NOT ATTEMPT TO USE THE FIREARM.

A. Williams-Style rear sights (slug models only):

Elevation may be adjusted by loosening the smaller of the two screws on the rear sight base. This will allow the sight leaf base to be raised or lowered by sliding the base up or down the rear sight ramp. Tighten screw after adjustment (Figure 16).

Windage may be adjusted by loosening the larger of the two screws and sliding the sight leaf left or right in the sight base. Tighten screw after adjustment (Figure 16).

Remember: Move the rear sight in the same direction you would like the shot to move. For example, if the point of impact is low and left of the point of aim, move the rear sight up and to the right.

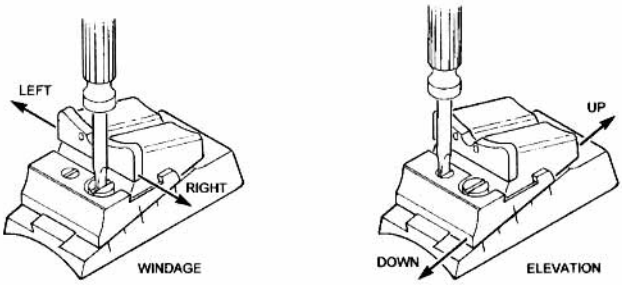

Figure 16

B. Turkey-Taker™ Fiber Optic sights (turkey models only):

Elevation may be adjusted by turning the screw, located on the rear sight, in or out. Turning the screw in (clockwise), will shift the point of impact up (Figure 17).

Windage may be adjusted by pulling up on the rear sight tab and swinging the rear sight to the left or right, locking in place in one of the three slots (Figure 17).

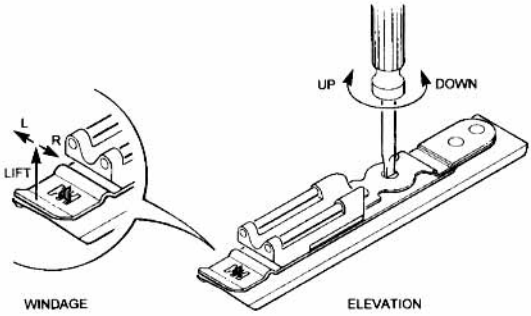

Figure 17

STOCK SPACER SYSTEM

Included with the 930™and 935™ shotguns is a matching set of stock spacers and stock retention plates. These spacers allow you to raise or lower the vertical position of the stock from 1/4" drop up to 3/8" rise. Each spacer and retention plate is marked with the amount of drop or rise they will provide (i.e., .250 DROP, .125 RISE, etc.). **In order to obtain the amount of drop or rise indicated on the spacer, the matching stock retention plate must be installed with the stock spacer.**

Stock Spacer Installation (Figure 18)

Move the safety button fully rearward to the "ON" (SAFE) position and visually and physically check the chamber, elevator, and magazine tube to be certain shotgun is unloaded. Wear eye protection during disassembly.

1. Remove recoil pad (screws will remain in recoil pad).
2. Remove stock nut using 3/4" socket wrench (Rotate counterclockwise).
3. Remove stock nut spacer and stock.
4. Remove existing stock retention plate from oval recess in stock.
5. Place selected stock spacer on back of receiver, text side facing out. (Note clocking slot).
6. Reinstall stock with matching retention plate in oval recess. **IMPORTANT: Retention plate must be installed with the text side facing out and right side up. (You should be able to read the markings right side up when looking into the butt end of the stock).**
7. Install stock nut spacer and stock nut. Do not over-tighten stock nut.
8. Replace recoil pad. Do not over-tighten screws.

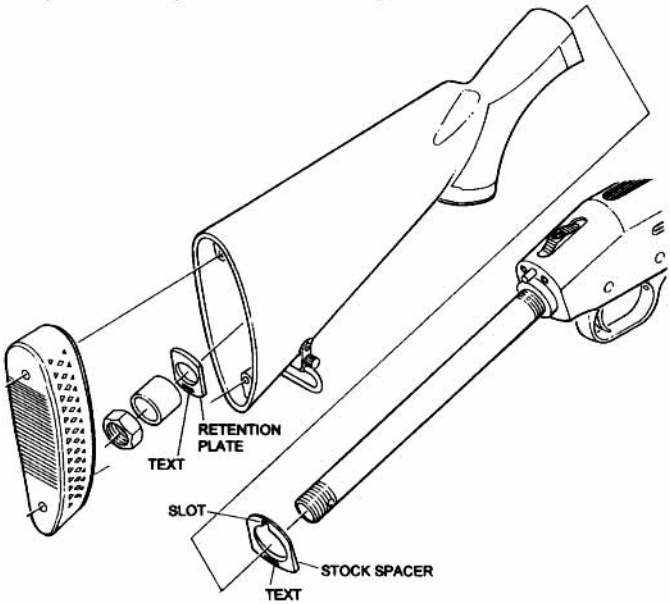

Figure 18

After performing any work on your firearm such as cleaning, disassembly, or installation of any accessory, check your firearm for proper functioning before firing any live ammunition.

ACCU-XT™ AND ACCU-MAG™ CHOKE TUBES

BEFORE REMOVING OR INSTALLING ANY CHOKE TUBE:

Move the safety button fully rearward to the "ON" (SAFE) position and keep muzzle pointed in a safe direction.

Open the action, visually and physically check chamber, elevator, and magazine tube to be certain firearm is unloaded.

Do not use bent or deformed choke tubes as these may result in tube or barrel damage upon firing which may cause serious personal injury to you or those around you. Inspect choke tubes periodically to insure they are properly installed and in good condition. Pay special attention to the threaded end of the choke tube to be certain it is not deformed or dented.

Never fire the shotgun without a choke tube properly installed. Failure to do so will damage the precision threads on the inside of the barrel. Firing the shotgun with loose choke tubes may lead to damage to the choke tube and barrel, as well as serious personal injury to you or those around you.

CARE & CLEANING: The precision threads on your choke tube should be kept clean and lightly oiled at all times.

During cleaning of the barrel, be certain a choke tube is properly installed. This will avoid residue build-up on threads.

ACCU-CHOKE™ TUBES (930™ MODELS ONLY)

ACCU-CHOKE™ tubes are designed for use with LEAD or STEEL shot. Each durable tube is clearly marked, as a guide, with the pattern it will produce.

TO REMOVE CHOKE TUBE: Loosen with choke wrench provided, turning it counterclockwise. When the choke tube is loosened, remove it completely with your fingers. Place choke tube on a clean, dry surface.

TO INSTALL CHOKE TUBE: Screw the tube clockwise into barrel by hand and then tighten the tube until snug with the choke wrench. These tubes fit completely inside the barrel when properly installed. Do not use excessive force when installing.

Tube tightness should be checked periodically.

12 GAUGE ACCU-CHOKE™ TUBES (**930™ Models** only)

ITEM #	PATTERN*
95190	FULL
95195	MODIFIED
95200	IMP. CYLINDER

ITEM #	PATTERN*
95235	SKEET
95245	IMP. MODIFIED
95267	XX-FULL (Turkey Tube)

* Lead, steel, and other non-toxic shot patterns will vary substantially depending on shell length, shot size, brand of ammunition, and the individual barrel. The shooter is urged to conduct pattern tests before field use.

ACCU-MAG™ CHOKE TUBES (935™ MODELS ONLY)

ACCU-MAG™ choke tubes are designed for use with Lead, Steel, and other non-toxic shot. Each durable tube is marked with the type of pattern it will produce.

TO REMOVE CHOKE TUBE: Loosen with choke wrench provided, turning it counterclockwise. When the choke tube is loosened, remove it completely with your fingers. Place choke tube on a clean, dry surface.

TO INSTALL CHOKE TUBE: Screw the tube clockwise into barrel by hand and then tighten the tube until snug with the choke wrench. These tubes fit completely inside the barrel when properly installed. Do not use excessive force when installing.

Tube tightness should be checked periodically.

12 GAUGE ACCU-MAG™ CHOKE TUBES

ITEM #	PATTERN*	ITEM #	PATTERN*
95256	SKEET	95254	FULL
95252	IMPROVED	95255	X-FULL
95253	MODIFIED	95257	ULTI-FULL (LEAD ONLY)

* Lead, steel, and other non-toxic shot patterns will vary substantially depending on shell length, shot size, brand of ammunition, and the individual barrel. The shooter is urged to conduct pattern tests before field use.

SLUGS: Overbored 935™ Accu-Mag™ barrels are designed for lead, steel, and other non-toxic shot loads only. We specifically disclaim any responsibility for damage or injury resulting from firing slugs (single projectile ammunition) through overbored barrels. Use only non-overbored 935™ barrels designed specifically for slug shooting.

ACCU-MAG™ ULTI-FULL™ TURKEY TUBE (935™ MODELS ONLY)

The NATIONAL WILD TURKEY FEDERATION has determined that the average distance at which turkeys are most effectively taken, under average environmental conditions and surroundings, is 30 yards.

Subsequently, Mossberg designed and manufactured this highly specialized choke tube for #4 or #6 lead shot to yield a high core concentration and high pellet count in a 20 inch circle at 30 yards. Shot patterns at distances greater than 30 yards will be less dense.

This special purpose "Turkey Tube" is specifically designed for use with Lead shot loads only.

Do not shoot steel shot through an Ulti-Full turkey tube as it may result in barrel damage.

Test results with the Ulti-Full™ Turkey Tube are averages and individual shotgun performance may vary. Mossberg recommends pattern testing with several brands of ammunition at various distances to familiarize yourself with your shotgun's performance.

SERVICE INSTRUCTIONS

Should your firearm, or any component of your firearm require service, kindly ship your entire firearm (please do not send components only), via your chosen carrier, postage paid (we do not accept C.O.D. shipments), following these instructions:

Make absolutely certain your firearm is unloaded.
Do not send ammunition with your firearm.

Remove all accessories from your firearm such as scopes, slings, swivels, mounts, etc.

Ship your firearm in a suitable container, packaging it securely to prevent parts from shifting and/or harm during shipping.

Include a note with a clear description of the service you wish us to perform, your complete return shipping address (no P.O. boxes please), your daytime telephone number, and your e-mail address (if available). It is advisable to place your correspondence inside your shipping container when shipping.

SHIPPING ADDRESS
Product Service Center
Maverick Arms, Inc.
1001 Industrial Blvd.
Eagle Pass, TX 78853
Attn: Repair

If you have any questions, please contact us at 1-203-230-5300 or service@mossberg.com

TO ORDER PARTS FROM MOSSBERG
To order parts from our authorized Product Service Center, you can fax, phone, mail, or e-mail your order to one of the following numbers/addresses.

Phone Number: (830) 773-9007 Fax Number: (830) 773-5893
E-mail Address: service@mossberg.com
Mailing Address: Product Service Center
Maverick Arms, Inc.
1001 Industrial Blvd.
Eagle Pass Industrial Park
Eagle Pass, TX 78853
Attn: Order Department

Please provide your name, street address, daytime phone number and e-mail (if available). We will need the Model #, Serial #, Gauge/Caliber, Finish, Part #, and Part Name. We have a $7.50 (U.S.) minimum parts order charge. We accept most major credit cards, money orders, and bank drafts.

Service outside of the U.S.A.
For Mossberg firearm parts and service requirements outside of the United States, customers are requested to contact the closest Mossberg stocking dealer/distributor.

MOSSBERG WARRANTY
930™ AND 935™ AUTO-LOADING SHOTGUN
TWO (2) YEAR LIMITED WARRANTY

Limited Warranty: O.F. Mossberg & Sons, Inc. ("Mossberg") warrants to you, the original retail purchaser of a new Mossberg® 930™ or 935™ Auto-Loading Shotgun (the "Mossberg firearm"), that the Mossberg firearm will be free of defects in material or manufacture for a period of two (2) years from the date of your purchase of the new Mossberg firearm (the "Warranty Period") in the United States or Canada. This is the only express warranty on the Mossberg firearm. MOSSBERG MAKES NO OTHER WARRANTIES OF ANY KIND OR CONDITIONS, INCLUDING, BUT NOT LIMITED TO ANY IMPLIED WARRANTY OF MERCHANTABILITY OR FITNESS FOR A PARTICULAR PURPOSE. This Limited Warranty gives you specific legal rights, and you may have other rights that vary from State to State.

Purchaser's Remedy: During the Warranty Period, Mossberg will, at its sole option, (1) repair the Mossberg firearm or any part thereof that, upon examination and testing by Mossberg, does not conform to the Limited Warranty without charge to you for parts or labor, or (2) replace the Mossberg firearm with a new or similar model. THIS REMEDY SHALL BE YOUR EXCLUSIVE AND SOLE REMEDY FOR ANY BREACH OF WARRANTY. MOSSBERG SHALL NOT BE RESPONSIBLE FOR ANY OTHER EXPENSES, LOSSES OR INCONVENIENCE THAT YOU MAY SUSTAIN AS A RESULT OF THE PURCHASE, USE, MALFUNCTION OR DEFECTIVE CONDITION OF THE MOSSBERG FIREARM. Mossberg reserves the right to inspect, examine and/or test the Mossberg firearm to assess any claim made under the Limited Warranty.

EXCLUSIONS: THIS WARRANTY DOES NOT COVER THE COSMETIC APPEARANCE OF THE MOSSBERG FIREARM OR ANY DAMAGE CAUSED BY:

(1) NORMAL WEAR AND TEAR;
(2) FAILURE TO PERFORM PROPER CARE AND MAINTENANCE;
(3) ACCIDENTS, ABUSE OR NEGLECT;
(4) BARREL OR BORE OBSTRUCTIONS;
(5) FAILURE TO FOLLOW THE INSTRUCTIONS AND WARNINGS THAT ACCOMPANY THE MOSSBERG FIREARM; OR
(6) THE USE OF DEFECTIVE, NON-SAAMI STANDARD, REMANUFACTURED, HAND-LOADED, AND/OR RELOADED AMMUNITION.

IN ADDITION, ANY UNAUTHORIZED REPAIRS, ALTERATIONS OR MODIFICATIONS TO THE MOSSBERG FIREARM WILL AUTOMATICALLY VOID THE LIMITED WARRANTY.

LIMITATION OF DAMAGES: EXCEPT WHERE PROHIBITED BY LAW, MOSSBERG WILL NOT BE LIABLE FOR ANY LOSS OR DAMAGE WHATSOEVER ARISING FROM THE USE OF THIS MOSSBERG FIREARM, WHETHER DIRECT, INDIRECT, SPECIAL, INCIDENTAL, CONSEQUENTIAL OR PUNITIVE, REGARDLESS OF THE LEGAL THEORY ASSERTED, INCLUDING CONTRACT, WARRANTY, NEGLIGENCE, OR STRICT LIABILITY. SOME JURISDICTIONS DO NOT ALLOW LIMITATIONS ON HOW LONG AN IMPLIED WARRANTY LASTS, OR THE EXCLUSION OF INCIDENTAL OR CONSEQUENTIAL DAMAGES, SO THE ABOVE LIMITATIONS MAY NOT APPLY TO YOU.

Warranty Service: To obtain service under this Limited Warranty, you must follow the instructions found in the "Service Instructions" section of the Owner's Manual and return the Mossberg firearm to the authorized Product Service Center. You are responsible for all shipping costs to the Product Service Center. Mossberg will not accept COD shipments of any Mossberg firearm for service. After repair or replacement, the Mossberg firearm or a similar model will be returned to you, return postage paid by Mossberg. If we replace the Mossberg firearm, we will keep the firearm that you returned to Mossberg.

Modification of Warranty: No agent, representative, distributor, or authorized dealer of Mossberg firearms has any authority to modify the terms or conditions of the Limited Warranty in any way. The Limited Warranty may only be modified in writing by an authorized officer of Mossberg.

THIS LIMITED WARRANTY IS EFFECTIVE JANUARY 1, 2003.

NOTES

NOTES

NOTES

MOSSBERG MODEL 930™ AND 935™ PARTS LIST			
ITEM	DESCRIPTION	ITEM	DESCRIPTION
1	BARREL ASSEMBLY	22	FOREARM RETAINER
2	FRONT SIGHT	23	GAS SYSTEM RETURN SPRING
3	CHOKE TUBE	24	PUSHER ASSEMBLY
4	SLING SWIVEL ASSEMBLY (2)	25	GAS PISTON SPACER TUBE
5	MAGAZINE CAP ASSEMBLY	26	GAS PISTON ASSEMBLY
6	FOREARM	27	SEAL RING
7*	RECEIVER ASSEMBLY	28	MAGAZINE SPRING RETAINER
8	TRIGGER HOUSING PIN	29	MAGAZINE CAP DETENT
9	STOCK PIN	30	MAGAZINE PLUG
10	RETURN SPRING RETAINER PIN	31	MAGAZINE SPRING
11	RETURN SPRING PLUNGER	32	MAGAZINE FOLLOWER
12	RETURN SPRING	33*	SLIDE ASSEMBLY
13	RETURN SPRING RETAINER	34	LINK PIN
14*	TRIGGER HOUSING ASSEMBLY	35	LINK
15	REAR SHELL STOP	36*	BOLT ASSEMBLY
16	FRONT SHELL STOP SPRING	37	OPERATING HANDLE
17	FRONT SHELL STOP	38	BUTTSTOCK
18	FRONT SHELL STOP PIN	39	STOCK RETENTION PLATE
19	REAR SHELL STOP PIN	40	STOCK NUT SPACER
20	SHELL STOP RETAINING CLIP	41	STOCK NUT
21	REAR SHELL STOP SPRING	42	RECOIL PAD
		43	RECOIL PAD SCREW (2)

*Items on parts list are reserved for qualified gunsmiths or authorized Product Service Center only.

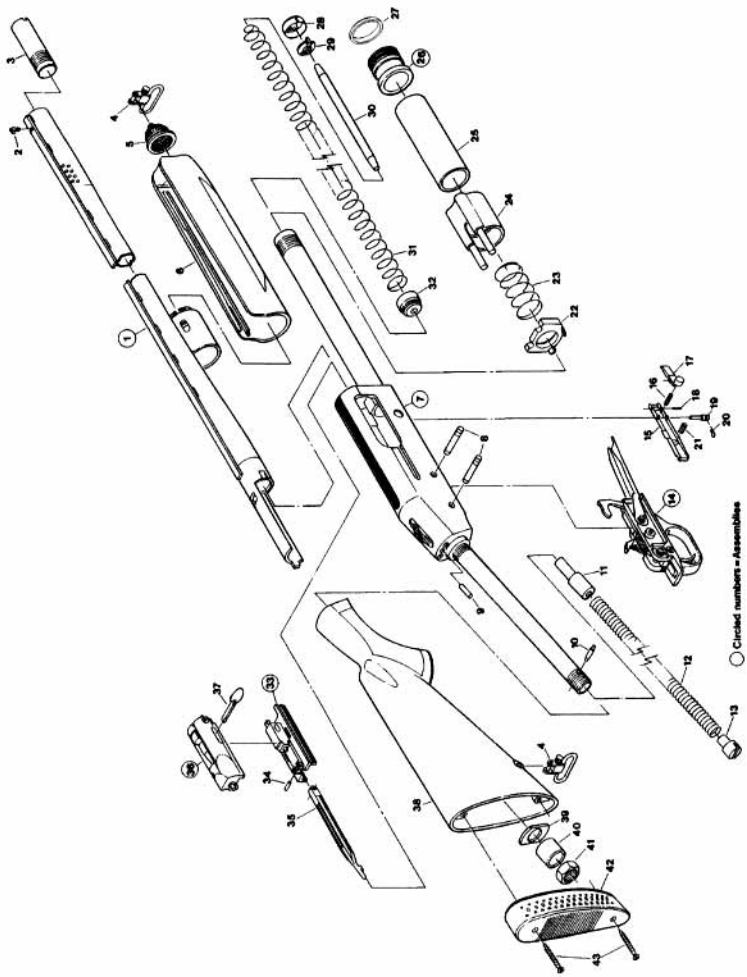
Circled numbers = Assemblies

FIREARMS SAFETY DEPENDS ON YOU. MAKE NO MISTAKE ABOUT IT!

From the time an individual picks up a firearm, that individual shooter becomes a part of a system over which he has complete control. He is the only part of the system that can make a gun safe – or unsafe. Hunting and target shooting are among the safest of all sports. This booklet is intended to make them even safer – by re-emphasizing and reaffirming the basics of safe gun handling and storage and by reminding each individual shooter that he or she is the key to firearms safety. You can help meet this responsibility by enrolling in hunter safety or shooting safety courses. You must constantly stress safety when handling firearms, especially to children and non-shooters. Newcomers in particular must be closely supervised when handling firearms with which they may not be acquainted. Don't be timid when it comes to gun safety. If you observe anyone violating any safety precautions, you have an obligation to suggest safer handling practices, such a those in this booklet. Please read these rules carefully and follow the safety procedures outlined. Firearms safety is up to you. Make no mistake about it.

1. **ALWAYS KEEP THE MUZZLE POINTED IN A SAFE DIRECTION**
2. **FIREARMS SHOULD BE UNLOADED WHEN NOT ACTUALLY IN USE**
3. **DON'T RELY ON YOUR GUN'S "SAFETY"**
4. **BE SURE OF YOUR TARGET AND WHAT'S BEYOND IT**
5. **USE CORRECT AMMUNITION**
6. **IF YOUR GUN FAILS TO FIRE WHEN THE TRIGGER IS PULLED, HANDLE WITH CARE**
7. **ALWAYS WEAR EYE AND EAR PROTECTION WHEN SHOOTING**
8. **BE SURE THE BARREL IS CLEAR OF OBSTRUCTIONS BEFORE SHOOTING**
9. **DO NOT ALTER OR MODIFY YOUR GUN, AND HAVE GUNS SERVICED REGULARLY**
10. **LEARN THE MECHANICAL AND HANDLING CHARACTERISTICS OF THE FIREARM YOU ARE USING**

Courtesy of
Sporting Arms and Ammunition Manufacturers' Institute, Inc.